Sigma 3.1

Heavy-duty modular tool changers

Higher strength, lower weight and a low profile maximizes robot load capability, while enhanced modularity and interchangeability increases flexibility.

Features and Benefits

- Higher payload capacity – up to 350kg
- Unique six-sided design accommodates more utilities
- A Sigma 3.1 and Sigma 5.1 common profile provides modularity and allows for interchangeability of utility modules
- Connects directly to your robot face plate, eliminating adaptor plate
- Low profile reduces inertial forces
- Supports wide variety of bus communication systems

Applications

- Spot welding
- Material handling
- Machine loading/unloading
- Mold changing
- Docking systems
- Pallet coupling systems
- Pick and place operations
- Press transfer

Not exactly what your application requires? Applied Robotics can design a solution that meets your particular application needs.

Applied Robotics™
Solutions in reach

SPECIFICATIONS

Description	Robot Adaptor	Tool Adaptor
Payload	350 kg	
Moment – Mx, My	15000 in lbs/1,695 Nm	
Moment – Mz	15700 in lbs/1,780 Nm	
Height	60 mm	60 mm
Width x Length	268 mm x 321 mm	
Weight *	16.5 lbs/7.34 kg	11.2lbs/5.13 kg
Couple/Uncouple Port	1/4 BSPP	na
Couple Status Sensor	Couple/Uncouple	na
Repeatability – X,Y	+/- 0.02 mm	
Repeatability – Z	+/- 0.013 mm	
Operating Temp.	5 – 60 Deg C	
Operating Pressure	6 bar +/- 1	

* Without modules

Note: Specifications provided are maximum recommended limits under static conditions. For correct product sizing, consideration must be given to all applicable dynamic forces, including manipulator inertia, tooling configuration and external process forces.

Note: For correct product sizing, please contact our Tech Support staff at techsupport@arobotics.com or via telephone at (800)309-3475 in NY or in MI at (248)358-3677.

Engineering Data

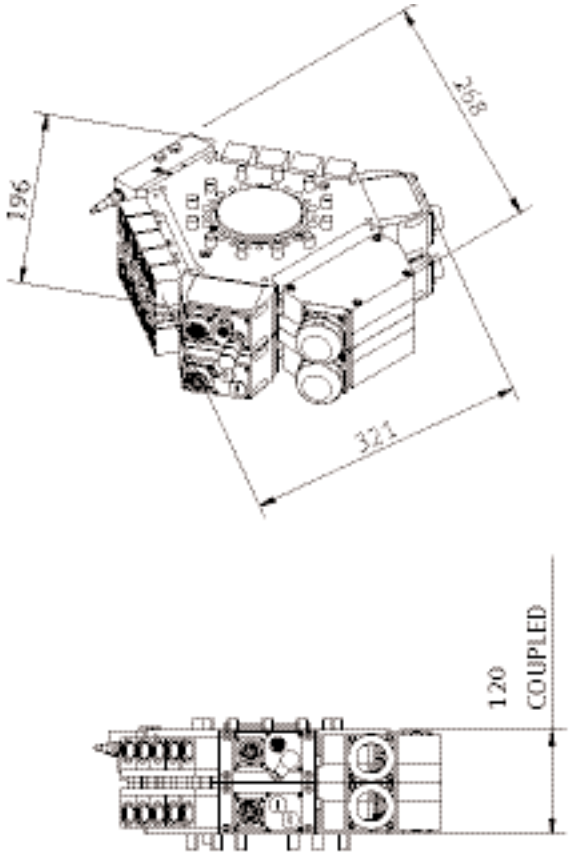

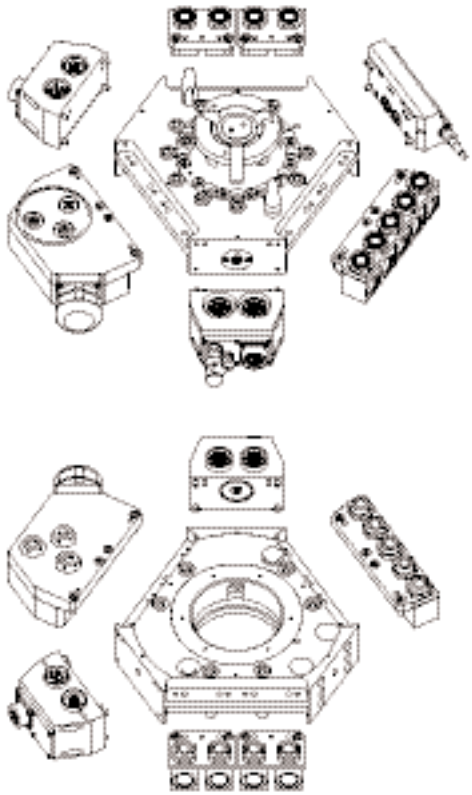

All dimensions in millimeters

Moment Charts

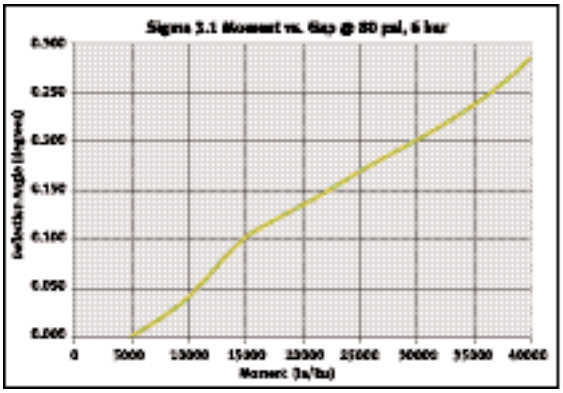

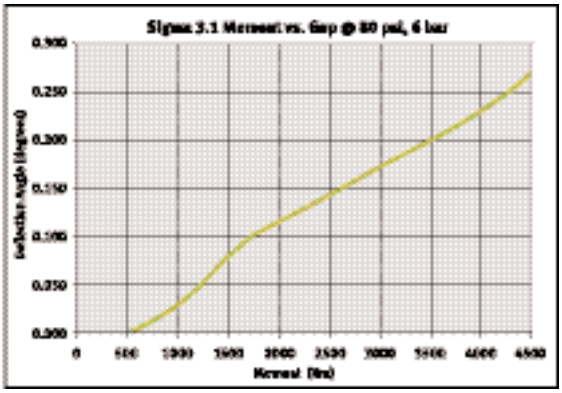

648 Saratoga Road
Glenville, NY 12302 USA
518 384 1000 tel
518 384 1200 fax

29193 Northwestern Hwy. #509
Southfield, MI 48034 USA
248 358 3677 tel
248 358 2654 fax

www.arobotics.com

Sigma 5.1

Heavy-duty modular tool changers

With a payload capacity of 500kg, the Sigma 5.1 brings greater modularity and exceptional strength to the heaviest jobs in factory production.

Features and Benefits

- Highest payload capacity of 500kg
- Unique six-sided design accommodates more utilities
- A Sigma 5.1 and Sigma 3.1 common profile provides modularity and allows for interchangeability of utility modules
- Eliminate adaptor plates for lower weight, and increased strength and efficiency
- Low profile reduces inertial forces
- Supports wide variety of bus communication systems

Applications

- Spot welding
- Material handling
- Machine loading/unloading
- Mold changing
- Docking systems
- Pallet coupling systems
- Pick and place operations
- Press transfer

Not exactly what your application requires? Applied Robotics can design a solution that meets your particular application needs.

SPECIFICATIONS

Description	Robot Adaptor	Tool Adaptor
Payload	500 kg	
Moment – Mx, My	2,937 Nm	
Moment – Mz	3,084 Nm	
Height	60 mm	60 mm
Width x Length	310 mm x 358 mm	
Weight	11.34 kg	8.66 kg
Couple/Uncouple Port	1/4 BSPP	na
Couple Status Sensor	Couple/Uncouple	na
Repeatability – X,Y	+/- 0.02 mm	
Repeatability – Z	+/- 0.013 mm	
Operating Temp.	5 – 60 Deg C	
Operating Pressure	6 bar +/- 1	

Note: Specifications provided are maximum recommended limits under static conditions. For correct product sizing, consideration must be given to all applicable dynamic forces, including manipulator inertia, tooling configuration and external process forces.

Note: For correct product sizing, please contact our Tech Support staff at techsupport@arobotics.com or via telephone at (800)309-3475 in NY or in MI at (248)358-3677.

Applied Robotics™
Solutions in reach

Engineering Data

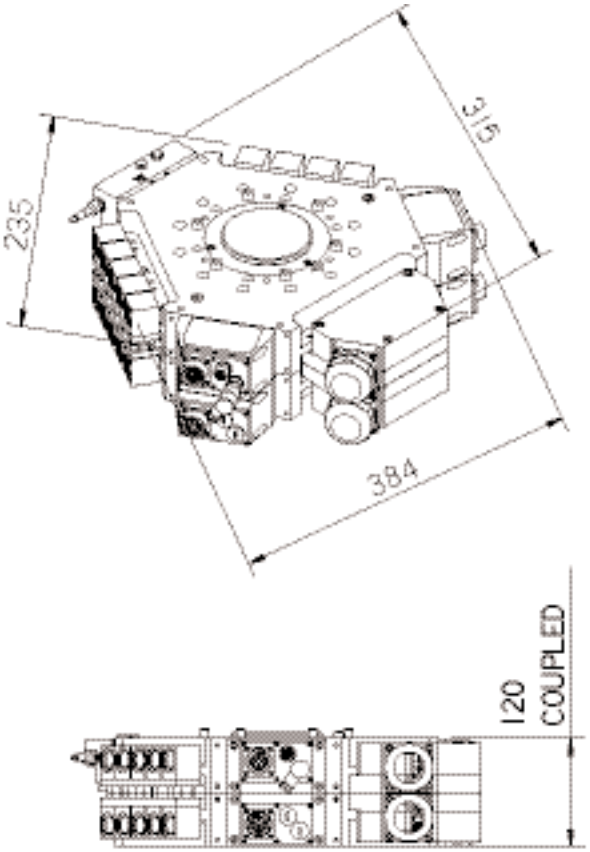

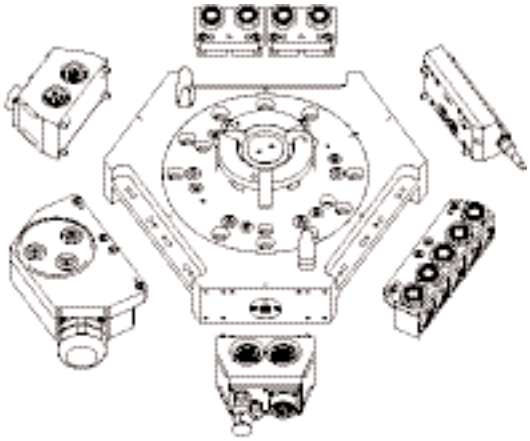

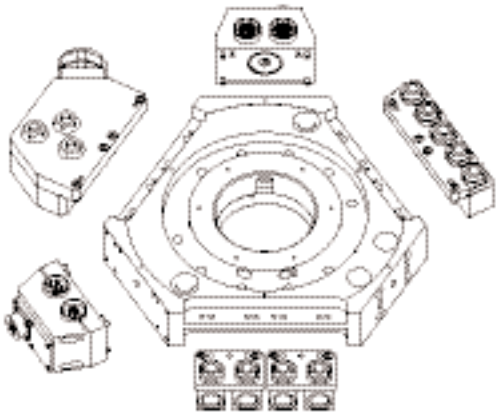

All dimensions in millimeters

Moment Charts

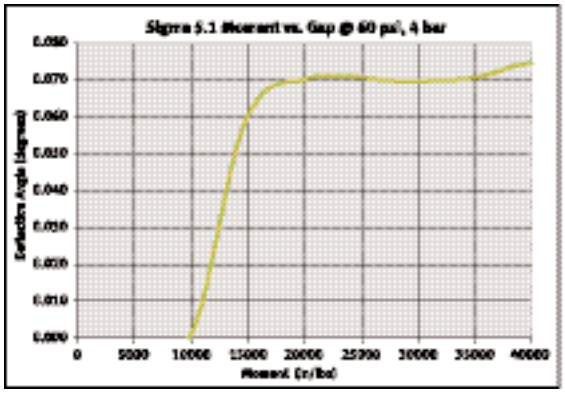

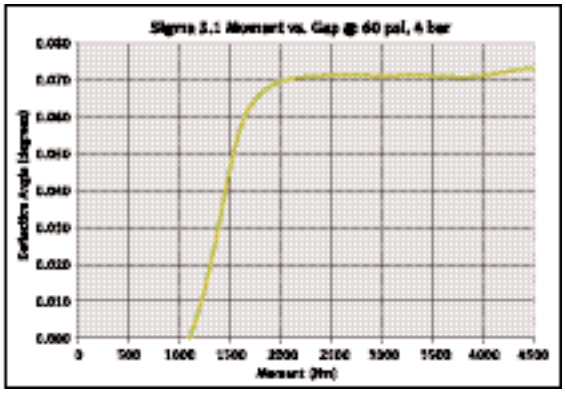

648 Saratoga Road
Glenville, NY 12302 USA
518 384 1000 tel
518 384 1200 fax

29193 Northwestern Hwy. #509
Southfield, MI 48034 USA
248 358 3677 tel
248 358 2654 fax

www.arobotics.com